

Custom hearing aids

ReSound Savi™

User guide

Hearing aid information

Left hearing aid		Right hearing aid	
Serial number		Serial number	
Model number		Model number	
Battery type	☐ 10A		

Program	Beep	Description
1	♩	
2	♩ ♩	
3	♩ ♩ ♩	
4	♩ ♩ ♩ ♩	

FDA warnings and cautions (US only)

WARNING: People younger than 18 should go to a doctor before using this

People younger than 18 years old need specialized care, and using this without a medical evaluation may worsen impairment or disability. A hearing aid user who is younger than 18 should have a recent medical evaluation from a doctor, preferably an ear-nose-throat doctor (an ENT). Before using this, a doctor should determine that the use of a hearing aid is appropriate.

⚠ WARNINGS to Hearing Aid Dispensers

You should advise a prospective hearing aid user to consult promptly with a doctor, preferably an ear specialist such as an ENT, before dispensing a hearing aid if you determine through inquiry, actual observation, or review of any other available information concerning the prospective user, that the prospective user has any of the following conditions:

- Visible deformity of the ear, either congenital or traumatic
- Fluid, pus, or blood coming out of the ear within the previous 6 months
- Pain or discomfort in the ear.
- History of excessive ear wax or suspicion that something is in the ear canal
- Dizziness, either recent or long-standing
- Sudden, quickly worsening, or fluctuating hearing loss within the previous 6 months

- Hearing loss or ringing (tinnitus) only in one ear or noticeable difference in hearing between ears
- Audiometric air-bone gap equal to or greater than 15 dB at 500 Hz, 1000 Hz, and 2000 Hz.

Outputs over 132 dB SPL:

You should exercise special care in selecting and fitting a hearing aid with a maximum output that exceeds 132 dB SPL because it may impair the remaining hearing of the hearing aid user.

Sound pressure level in the ears of children:

The developed sound pressure level in the ears of children can be substantially higher than in average adults.It is recommended to perform an RECD measurement to ensure the correct target for the fitted OSPL90.



CAUTION:

This is not hearing protection

You should remove this device if you experience overly loud sounds, whether short or long-lasting. If you're in a loud place, you should use the right kind of hearing protection instead of wearing this device. In general, if you would use ear plugs in a loud place, you should remove this device and use ear plugs.

The sound output should not be uncomfortable or painful

You should turn down the volume or remove the device if the sound output is uncomfortably loud or painful. If you consistently need to turn the volume down, you may need to further adjust your device.

You might need medical help if a piece gets stuck in your ear

If any part of your hearing aid, like the ear tip (dome), gets stuck in your ear, and you can't easily remove it with your fingers, get medical help as soon as you can. You should not try to use tweezers or cotton swabs because they can push the part further into your ear, injuring your eardrum or ear canal, possibly seriously.

NOTE:

What you might expect when you start using your hearing aid

- A hearing aid can benefit many people with hearing loss. However, you should know it will not restore normal hearing, and you may still have some difficulty hearing over noise. Further, a hearing aid will not prevent or improve a medical condition that causes hearing loss.
- People who start using hearing aids sometimes need a few weeks to get used to them. Similarly, many people find that training or counseling can help them get more out of their devices.
- If you have hearing loss in both ears, you might get more out of using hearing aids in both, especially in situations that make you tired from listening – for example, noisy environments.

Tell FDA about injuries, malfunctions, or other adverse events

- To report a problem involving your hearing aid, you should submit information to FDA as soon as possible after the problem. FDA calls them “adverse events”, and they might include: skin irritation in your ear, injury from the device (like cuts or scratches, or burns from an overheated battery), pieces of the device getting stuck in your ear, suddenly worsening hearing loss from using the device, etc.

  Instructions for reporting are available at *www.fda.gov/Safety/MedWatch*, or call 1-800-FDA-1088. You can also download a form to mail to FDA.

Hearing loss in people younger than 18

- People younger than 18 should see a doctor first, preferably an ear-nose-throat doctor (an ENT), because they may have different needs than adults.
- The doctor will identify and treat medical conditions as appropriate.
- The doctor may refer the person to an audiologist for a separate test, a hearing aid evaluation.
- The hearing aid evaluation will help the audiologist select and fit the appropriate hearing aid.

A person who is younger than 18 years old with hearing loss should have a medical evaluation by a doctor, preferably an ENT, before buying a hearing aid. The purpose of a medical evaluation is to identify and treat medical conditions that may affect hearing but that a hearing aid won't treat on its own.

Following the medical evaluation and if appropriate, the doctor will provide a written statement that the hearing loss has been medically evaluated and the person is a candidate for a hearing aid. The doctor may refer the person to an audiologist for a hearing aid evaluation, which is different from the medical evaluation and is intended to identify the appropriate hearing aid.

The audiologist will conduct a hearing aid evaluation to assess the person's ability to hear with and without a hearing aid. This will enable the audiologist to select and fit a hearing aid for the person's individual needs. An audiologist can also provide evaluation and rehabilitation since, for people younger than 18, hearing loss may cause problems in language development and educational and social growth. An audiologist is qualified by training and experience to assist in the evaluation and rehabilitation of hearing loss in people younger than 18.

Table of Contents

FDA warnings and cautions (US only) 3
Introduction 10
Getting to know your hearing aid 13
How to get your hearing aid ready for use 14
Placing your hearing aids in your ears 18
Removing your hearing aids 20
Using your hearing aids 21
Cleaning and caring for your hearing aids 24
Tinnitus management 30
General warnings and cautions 38
Troubleshooting 42
Regulatory information 44
Technical specifications 51
All Low Power (LP) models (US only) 52
Medium Power (MP) models (US only) 53
High Power (HP) models (US only) 54
Additional information 55

Introduction

Read this user guide carefully before using your hearing aids for the first time. Note that the illustrations may vary from your hearing aids and their components. We recommend that you use your hearing aids every day to fully benefit from them.

Intended purpose

The hearing aid is intended to compensate for hearing impairment by amplifying and transmitting sound to the ear.

User profile

- The hearing aid is intended to be used by adults and children 12 years of age or older.
- The hearing aid is intended to be used by laypersons.
- The hearing aid is intended to be fitted by qualified hearing care professionals.

Therapeutic indications

Sensorineural, conductive, or mixed hearing loss.

Contraindications

A hearing care professional should advise a prospective hearing aid user to consult promptly with a licensed physician (preferably an ear specialist) before dispensing a hearing aid, if the hearing aid dispenser determines through inquiry, actual observation, or review of any other available information concerning the prospective user, that the prospective user has any of the following conditions:

- Visible, congenital or traumatic deformity of the ear.
- History of active drainage from the ear within the previous 90 days.
- History of sudden or rapidly progressive hearing loss within the previous 90 days.
- Acute or chronic dizziness.
- Unilateral hearing loss of sudden or recent onset within the previous 90 days.
- Audiometric air-bone gap equal to or greater than 15 dB at 500 Hertz (Hz), 1000 Hz, and 2000 Hz.
- Visible evidence of significant cerumen accumulation or a foreign body in the ear canal.
- Pain or discomfort in the ear.

Side effects

If you experience side effects, contact a hearing care professional or a physician. Possible side effects from wearing a hearing aid may be:

- Dizziness
- Tinnitus
- Perceived worsening of hearing loss
- Nausea
- Headache
- Skin reaction
- Ear wax accumulation

Symbols

The symbols below are used in this user guide, on the device, or on the packaging.



CAUTION: Indicates a situation that could lead to minor and moderate injuries.



Date of manufacture.



Medical device.



Serial number.



By prescription only (US).



IMDA label for Singapore.



WARNING: Points out a situation that could lead to serious injuries.



Legal manufacturer.



Follow instructions for use. (Logo in blue)



Unique Device Identification.



Device is subject to US certification.



Regulatory compliance mark for Australia and New Zealand.



Follow local regulations when disposing of electronic devices.

Getting to know your hearing aid

Front view

1. Microphone inlet
2. Sound outlet with wax guard
3. Vent (optional)
4. Push button (optional)
5. Removal cord (optional)
6. Vent (optional)
7. Battery door and On/Off switch
8. Manufacturer, model and serial number (color coded).

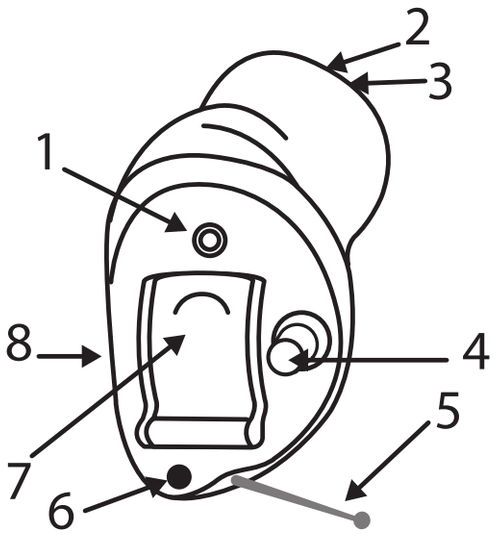

Side view

9. Manufacturer, model and serial number (color coded).

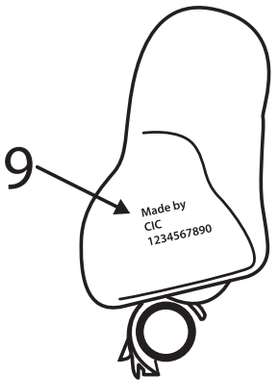

How to get your hearing aid ready for use

Replacing the battery

1. Prepare the new battery. Remove the protective foil to activate the battery. Wait for 2 minutes before inserting the battery into the hearing aid.

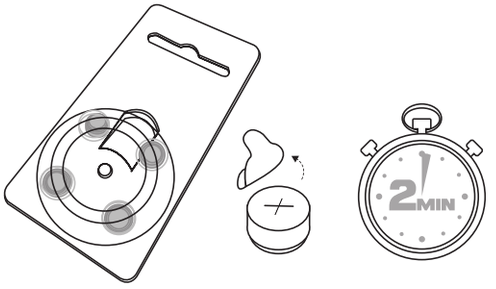

2. Open the battery door completely by using your fingernail. Remove the used battery, if present.

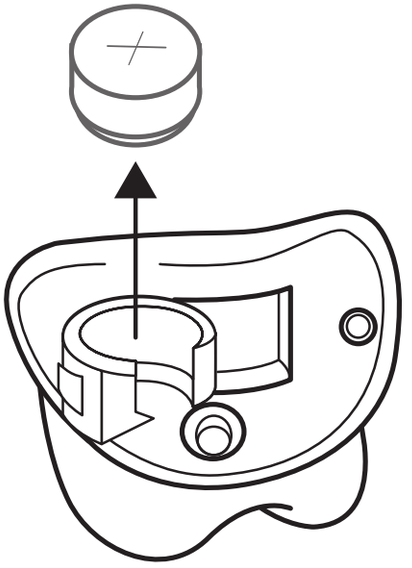

3. Insert the new battery in the battery door with the + side facing upwards. Gently close the battery door.

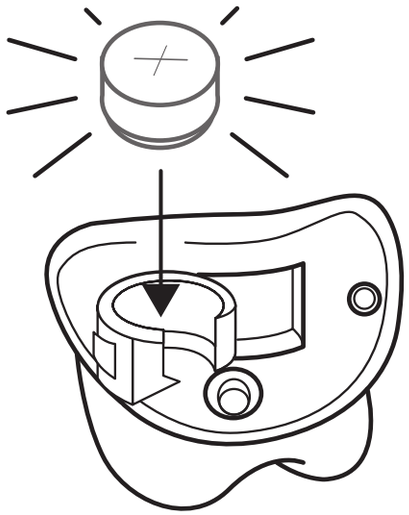

When the hearing aid is not in use, open the battery door to turn it off. Open the battery door completely to allow moisture to evaporate and prolong the hearing aids' life span.

Battery warnings



WARNING:

- Battery leakage can cause chemical burns. If you get exposed to battery leakage material, rinse immediately with warm water. If you get chemical burns, redness, or skin irritation from battery leakage, seek medical attention.
- Batteries may leak. If you are not going to use your hearing aids for a few days, you must remove the batteries.
- Never swallow batteries nor place them inside any part of the body, as the battery can cause serious injuries. If a hearing aid or battery has been swallowed or placed inside any part of the body, seek immediate medical attention.
- Batteries are harmful to the environment. Therefore, never try to burn them. Dispose of your used batteries according to your country's regulations or return them to a hearing care professional.



CAUTION: Never try to charge hearing aids with zinc-air batteries as this can cause leakage or a small explosion.

NOTE:

- Always use zinc-air batteries with at least one year left before they expire.
- To save battery power, turn off your hearing aids when they are not in use.

Low battery alert

When the batteries are low on power, the volume in your hearing aids will reduce and a melody will play every 15 minutes until there is no more power – then your hearing aids will turn off.

NOTE: Keep extra batteries with you.

Placing your hearing aids in your ears

How to tell left from right

CAUTION: If you have two hearing aids, they may each be programmed differently. Do not swap them as this could damage your hearing.
Your hearing aids are color-coded.

Left hearing aid
(blue marking on the side)

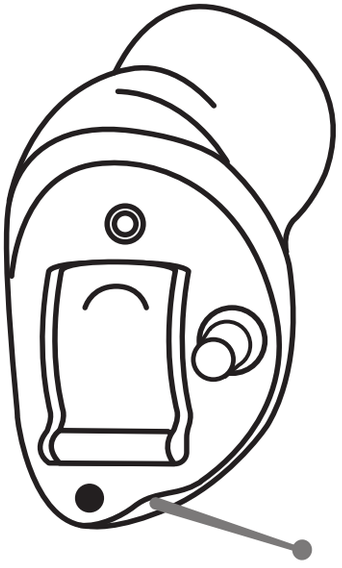

Right hearing aid
(red marking on the side)

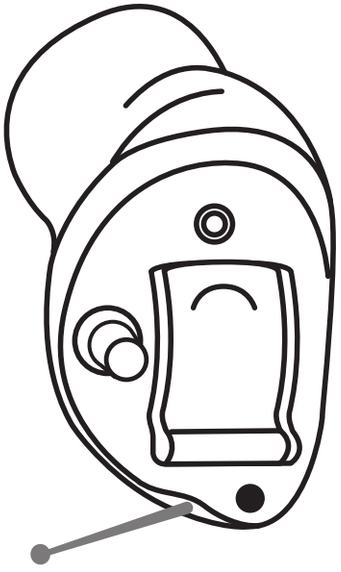

NOTE: Your hearing aids are made to fit exactly into your left and your right ear respectively. So each of them will only fit correctly to the ear it is made for.

Inserting the hearing aids

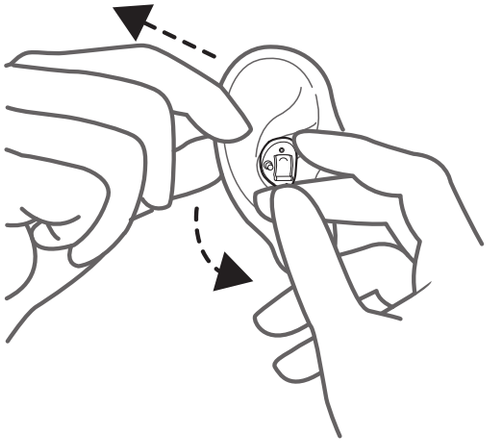

1. Hold the hearing aid between your thumb and index finger, either at the top and the bottom or at the sides.
2. Insert the hearing aid into your ear canal:
   Place the sound outlet portion into your ear canal.
   Turn the top part of the hearing aid gently backwards and forwards so that it tucks behind the fold of skin above your ear canal.

3. Check that the vent opening is in the notch just above your earlobe.

By experimenting, you may discover an easier method. With proper insertion, hearing aids should fit snugly but comfortably.

NOTE: It may be helpful to pull your ear up and outward with your opposite hand during insertion.

Removing your hearing aids

1. Hold the edges of the hearing aid with your thumb and index finger. Pull out and slightly upward, while slightly rotating your hand forward.
2. If your hearing aid has a pull-out wire, pull at the wire to remove the hearing aid.

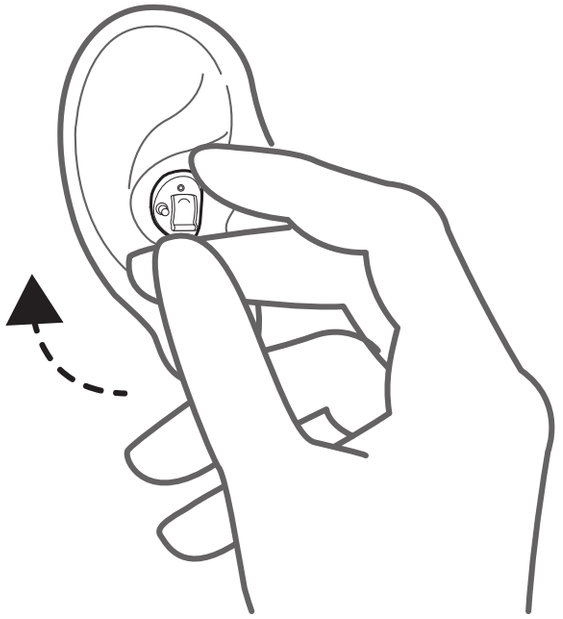

3. Wipe your hearing aids to remove any debris.
4. If you are not going to use the hearing aids now, turn them off. See "Turning your hearing aids on and off", page 21.

Using your hearing aids

Turning your hearing aids on and off

To turn your hearing aid ON:
Close the battery door (with a battery correctly placed in the door).
Your hearing aids always start in program 1 at the pre-set volume.

To turn your hearing aid OFF:
Use a fingernail to open the battery door.

Volume control

If your hearing aids have a push button, you can use it to adjust the volume or switch between listening programs. See Push button (optional) below.

Push button (optional)

Your hearing aid may have a push button allowing you to use up to four different listening programs. See "Listening programs", page 22.

1. Push the program button to switch between programs.
2. You will then hear one or more beeps. The number of beeps indicates which program you have selected (one beep = program one, two beeps = program two, etc.).
3. When you turn the hearing aids off and then back on, they always return to the default setting (program 1 and preset volume).

Listening programs

Your hearing care professional can activate up to four listening programs in your hearing aids. The programs can help you in specific situations. Ask your hearing care professional about which programs could be useful for you.

Program	Use
All-Around	This is the best option if you want to use only one program. It is suitable for most listening environments.
Hear in Noise	This is a dedicated program for hearing speech in noisy places such as restaurants or social gatherings.
Music	This program is suitable for listening to music or watching TV.
Acoustic phone	This program is suitable for phone conversations.
Outdoor	This is the best option for outdoor use. It reduces wind noise and other sounds such as road noise in the car.

Using a telephone

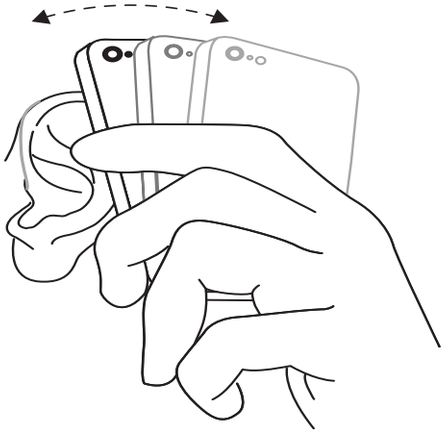

Your hearing aid allows you to use your telephone as you normally do. Finding the optimal position for holding the phone may require practice.

The following suggestions may be helpful:

- Hold the telephone up to your ear canal as usual.
- If you hear whistling, try holding the telephone in the same position for a few seconds. The hearing aid may be able to cancel the whistling.
- You can also try holding the telephone slightly away from the ear.

Mobile phones

Your hearing aids comply with the most stringent Standards of International Electromagnetic Compatibility. Any degree of disturbance can be due to the nature of your particular mobile phone or of your wireless telephone service provider.

Cleaning and caring for your hearing aids

Cleaning tools

These cleaning tools come with your hearing aids:

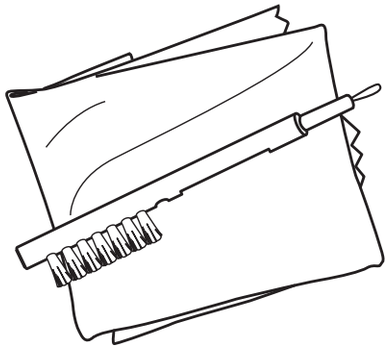

- Soft cloth
- Brush with a battery magnet
- Cleaning wire (not shown)

Your hearing care professional may give you a set of wax guards.

General instructions for care and maintenance

To ensure you get the highest quality experience and longest useful lifetime out of your hearing aids, it is important to clean and care for them.

To maintain your hearing aids, clean and disassemble them one at a time to prevent mixing them up.

Follow these steps:

1. When you remove your hearing aids, turn them off by opening the battery doors completely. This helps to dry them out.
2. After removing your hearing aids, wipe them with a soft cloth to keep them clean and dry.
3. If you use a drying agent, only use recommended products.
4. Do not apply cosmetics, perfume, after-shave, hairspray, lotions etc. before putting on your hearing aids. These products can damage or discolor your hearing aids.

NOTE:

- Never immerse your hearing aids in liquid.
- Keep your hearing aids away from excessive heat and direct sunlight.
- The hearing aid is dust, splash, and water resistant:
  - The hearing aid has IP6X dust resistance. Avoid exposure to extensive dust.
  - The hearing aid has IPX8 water resistance. Avoid exposure to liquids, and do not swim, shower or sauna while wearing the hearing aid.

CAUTION:

- Only use recommended drying agents.
- Never use alcohol or other cleaning solutions to clean your hearing aids. This can damage your hearing aids and may cause a skin reaction.
- Ear wax or other residue on your hearing aids can cause an infection or allergy. To avoid this, clean your hearing aids as instructed.

Cleaning your hearing aids

It is important to keep your hearing aids clean and dry on a daily basis. Use a cloth and brush to clean the hearing aids.

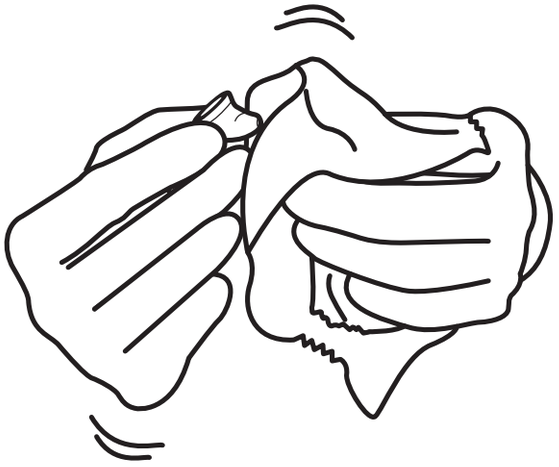

1. Wipe your hearing aids with a cloth.

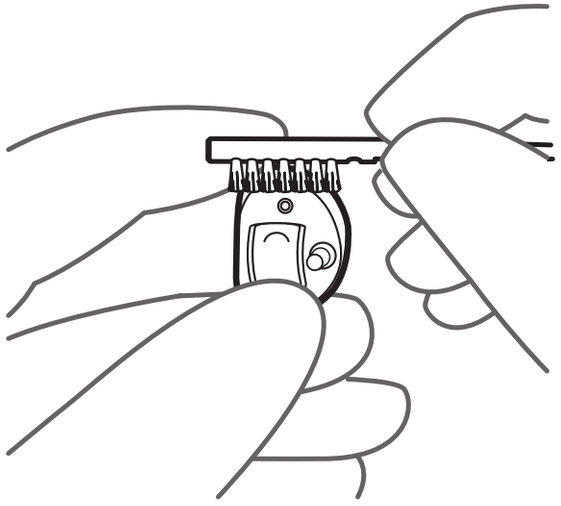

2. Swipe the small brush across the microphone.



3. Use the supplied cleaning wire to clean the vent that goes through the hearing aid. Insert the wire from the outside of the hearing aid to push out any debris.

NOTE:

- Never try to put the brush bristles or the cleaning wire into the microphone inlets. This can damage your hearing aids.

How to replace wax guards

Your custom hearing aid may have a wax guard. The filter protects the hearing aid against wax and moisture. It is recommended to change it when needed depending on the amount of wax your ear produces. Consult your hearing care professional for advice on how often you need to change.

The wax guard is located at the inward end of the hearing aid.

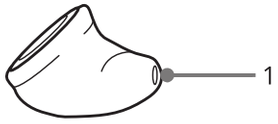

If you don't feel comfortable replacing the wax guard, ask your hearing care professional to do it for you.

Changing the wax guard

To change a wax guard, you will need your case of wax guard tools.

The wax guard tool has two functions: A removal tip to collect the used filter, and a replacement tip with the new filter.

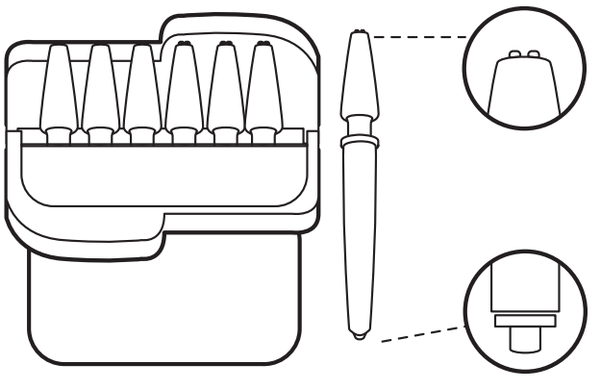

Case of 8 wax guard tools.

NOTE: The shape of the filter tool and the case may vary. Yours may look different.

1. To remove the old wax guard, insert the removal tip into the used wax guard. Slowly pull the wax guard straight out.
2. To insert the new wax guard, gently press the replacement end of the wax guard tool straight into the hole of the sound outlet until the outer ring lies flush with the outside of the hearing aid.
3. Pull the tool straight out. Your new filter will remain in place.

NOTE: Your hearing aid may have a vent hole next to the wax guard outlet. Make sure not to insert the wax guard tool into the vent.

NOTE: Pressing on the new wax filter with the flat side of the tool can ensure that the wax guard is correctly in place.

Storing your hearing aids

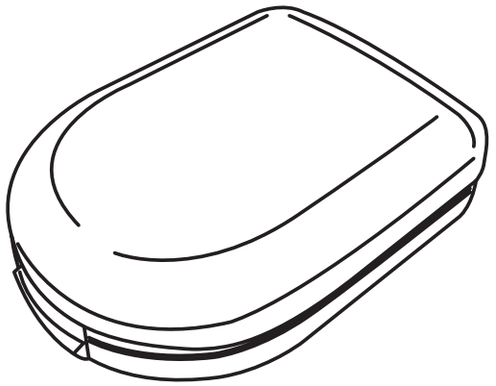

When you are not using your hearing aids, store them in the case they came in.

Tinnitus management

℞ ONLY

Tinnitus Sound Generator module

Your ReSound hearing aid includes the Tinnitus Sound Generator (TSG) module, a tool for generating sounds to be used in tinnitus management programs to temporarily relieve suffering from tinnitus. The TSG can generate sounds adjusted to the specific therapeutic needs and your personal preference as determined by your doctor, audiologist, or hearing care professional. Depending on the selected hearing aid program and the environment you are in, you will sometimes hear the therapeutic sound resembling a continuous or fluctuating noise.

Indications for use of the TSG module

The Tinnitus Sound Generator module is a tool to generate sounds to be used in a Tinnitus Management Program to temporarily relieve patients suffering from Tinnitus. The target population is primarily the adult population over 18 years of age. This product may also be used for children 12 years of age or older.

For healthcare professionals

The Tinnitus Sound Generator module is targeted for healthcare professionals who are treating patients suffering from Tinnitus, as well as conventional hearing disorders. The initial fitting of the Tinnitus Sound Generator module must be done during an in-office visit by a hearing professional participating in a Tinnitus Management Program.

User instructions for the TSG module

Description of the device

The Tinnitus Sound Generator (TSG) Module is a software tool that generates sounds to be used in tinnitus management programs to temporarily relieve suffering from tinnitus.

Explanation of how the device functions

The TSG module is a frequency and amplitude shaped white-noise generator. Noise signal level and frequency characteristics can be adjusted to the specific therapeutic needs as determined by your doctor, audiologist or hearing care professional.

Your doctor, audiologist or hearing care professional can modulate the generated noise to make it more pleasant. The noise can then resemble, for example, breaking waves on a shore.

Modulation level and speed can also be configured to your likes and needs. An additional feature can be enabled by your hearing care professional that allows you to select predefined sounds that simulate sounds from nature, such as breaking waves or running water.

If you have two wireless hearing aids that support ear-to-ear synchronization, this functionality can be enabled by your hearing care professional. This will cause the Tinnitus Sound Generator to synchronize the sound in both hearing aids.

If your tinnitus only troubles you in quiet environments, your doctor, audiologist, or hearing care professional can set the TSG Module so that it becomes audible exclusively in such surroundings. The overall sound level can be adjusted using a volume control. Your doctor, audiologist, or hearing care professional will review with you the need for having such a control.

For hearing aids where ear-to-ear synchronization is enabled, your hearing care professional can also enable environmental monitoring synchronization so that the TSG noise level is automatically adjusted simultaneously in both hearing aids dependent on the background sound level. Additionally, since the hearing aid has a volume control, the background noise level is monitored by the hearing aid and the volume control can be used simultaneously to adjust the generated noise level in both hearing aids.

The scientific concepts that form the basis for the device

The TSG module provides sound enrichment intending to surround the tinnitus sound with a neutral sound which is easily ignored. Sound enrichment is an important component of most approaches to tinnitus management, such as tinnitus retraining therapy (TRT).

To assist habituation to tinnitus, this needs to be audible. The ideal level of the TSG module, therefore, should be set so that it starts to blend with the tinnitus, and so that you can hear both your tinnitus as well as the sound used.

In most instances, the TSG module can also be set to mask the tinnitus sound, to provide temporary relief by introducing a more pleasant and controllable sound source.

TSG volume control

The sound generator is set to a specific loudness level by the hearing care professional. When switching the sound generator on, the volume will have this optimal setting. Therefore, it might not be necessary to control the volume (loudness) manually. However, the volume control provides the ability to adjust the volume, or amount of stimulus, to the liking of the user.

The tinnitus sound generator volume can only be adjusted within the range set by the hearing care professional.

The volume control is an optional feature in the TSG module used for adjusting the sound generator output level.

TSG - Technical specifications

Audio signal technology:

Digital

Available sounds

White noise signal which can be shaped with the following configurations:

High-pass filter	Low-pass filter
500 Hz	2000 Hz
750 Hz	3000 Hz
1000 Hz	4000 Hz
1500 Hz	5000 Hz
2000 Hz	6000 Hz
-	8000 Hz

The white noise signal can be modulated in amplitude with an attenuation depth of up to 14 dB.

Prescription use of a Tinnitus Sound Generator hearing aid

 WARNING:

The TSG module should be used as prescribed by your doctor, audiologist or hearing healthcare professional. In order to avoid permanent hearing damage, the maximum daily usage depends on the level of the generated sound.

To adjust TSG, please consult your hearing healthcare professional.

Should you develop any side effects from using the sound generator, such as dizziness, nausea, headaches, perceived decrease in auditory function or increase in tinnitus perception, you should discontinue the use of the sound generator and seek medical evaluation.

The target population is primarily the adult population over 18 years of age. This product may also be used for children 12 years of age or older. However, children and physically or mentally challenged users will require training by a doctor, audiologist, hearing healthcare professional or the guardian for the insertion and removal of the hearing aid containing the TSG module.

Important notice for prospective sound generator users

A tinnitus masker is an electronic device intended to generate noise of sufficient intensity and bandwidth to mask internal noises. It is also used as an aid in hearing external noises and speech.

Good health practice requires that a person with a tinnitus condition have a medical evaluation by a licensed physician (preferably a physician who specializes in diseases of the ear) before using a sound generator. Licensed physicians who specialize in diseases of the ear are often referred to as otolaryngologists, otologists, or otorhinolaryngologists.

The purpose of medical evaluation is to ensure that all medically treatable conditions that may affect tinnitus are identified and treated before the sound generator instrument is used.

The sound generator instrument is a tool to generate sounds to be used with appropriate counseling and/or in a tinnitus management program to relieve patients suffering from tinnitus.

⚠ Tinnitus Sound Generator warnings

- Sound generators can be dangerous if improperly used.
- Sound generators should be used only as advised by your doctor, audiologist, or hearing care professional.
- Sound generators are not toys and should be kept out of reach of anyone who might cause themselves injury (especially children and pets).

⚠ Tinnitus Sound Generator precautions

1. Should the user develop any side effects from using the sound generator, such as dizziness, nausea, headaches, a perceived decrease in auditory function or an increase in tinnitus perception, the user should discontinue use of the sound generator and seek medical evaluation.
2. Discontinue use of the sound generator and consult promptly with a licensed physician if you experience any of the following conditions:

a. Visible, congenital or traumatic deformity of the ear.
b. History of active drainage from the ear within the previous 90 days.
c. History of sudden or rapidly progressive hearing loss within the previous 90 days.
d. Acute or chronic dizziness.
e. Unilateral hearing loss of sudden or recent onset within the previous 90 days.
f. Visible evidence of significant cerumen accumulation or a foreign body in the ear canal.
g. Pain or discomfort in the ear.

3. Discontinue use of the sound generator and consult promptly with your hearing care professional if you experience changes in the tinnitus perception, discomfort or interrupted speech perception while using the Tinnitus Sound Generator.
4. The volume control is a feature in the TSG module used for adjusting the sound generator output level. To prevent unintended usage by pediatric or physically or mentally disabled users, the volume control must be configured to only provide a decrease of the sound generator output level.
5. Children, and physically or mentally disabled users will require guardian supervision while wearing the TSG hearing aid.
6. Adjustment of the Tinnitus Sound Generator settings, using a smartphone app, should only be performed by the parent or legal guardian in cases where the user is minor.

⚠ Tinnitus Sound Generator warning to hearing care professionals

A hearing care professional should advise a prospective sound generator user to consult promptly with a licensed physician (preferably an ear specialist) before getting a sound generator.

If the hearing care professional determines through inquiry, actual observation, or review of any other available information concerning the prospective user that the prospective user has any of the following conditions:

1. Visible, congenital or traumatic deformity of the ear.
2. History of active drainage from the ear within the previous 90 days.
3. History of sudden or rapidly progressive hearing loss within the previous 90 days.
4. Acute or chronic dizziness.
5. Unilateral hearing loss of sudden or recent onset within the previous 90 days.
6. Audiometric air-bone gap equal to or greater than 15 dB at 500 Hertz (Hz), 1000 Hz, and 2000 Hz.
7. Visible evidence of significant cerumen accumulation or a foreign body in the ear canal.
8. Pain or discomfort in the ear.



CAUTION: The maximum output of the sound generator falls into the range that can cause hearing loss according to OSHA regulations. In compliance with NIOSH recommendations, the user should not use the sound generator for more than eight (8) hours a day when it is set to a level of 85 dB SPL or above. When the sound generator is set to levels of 90 dB SPL or above, the user should not use it for more than two (2) hours per day. In no case should the sound generator be worn at uncomfortable levels.

General warnings and cautions

WARNING:

- Consult a hearing care professional or a physician:
  - If you think there may be a foreign object in your ear canal
  - If you experience skin irritation
  - If excessive ear wax accumulates with the use of the hearing aid

See also "Contraindications", page 10

- Seek immediate medical help if a hearing aid, a device, their parts, battery, or magnet is swallowed, as it can cause choking and harm your health.
- Keep your hearing aids and devices, along with any parts, batteries, and magnets, away from pets, children, and people with cognitive, intellectual, or mental health challenges.
- Always supervise children or individuals with cognitive, intellectual, or mental health challenges when they are using their hearing aids. Hearing aids contain small pieces that can be dangerous if swallowed.
- Do not wear your hearing aids while exposed to radiation. Some types of radiation, including MRI or CT scanners, can affect the settings in your hearing aids. This may cause malfunction and potentially damage your hearing.
- Other types of radiation, such as burglar alarms, room surveillance systems, mobile phones, metal detectors, and radio equipment will not damage your hearing aids. However, they may briefly affect the sound quality in your hearing aids and may create undesired sounds.

- Never use your hearing aids in places with explosive gases such as mines, oil fields, or similar unless these areas are certified for hearing aid use. Using your hearing aids in places that are not certified for hearing aid use can be dangerous.
- Do not dry your hearing aids in an oven, microwave oven, or other heating equipment. This will cause them to melt and may cause burns to your skin.
- In general, exposure to loud sounds can damage your hearing. This could be loud music or loud environments. You can best protect your hearing by reducing exposure to loud sounds and environments or by using hearing protection.
- External devices connected to the electrical input must be safe according to the requirements of IEC 60601-1:2005+AMD1:2012+AMD2:2020, IEC 60065, or IEC 60950-1, IEC 62368-1 as appropriate.
- Your hearing aids have been fitted to amplify soft and loud sounds according to your needs. If the amplification seems too loud or you suspect the hearing aid is malfunctioning (e.g., you hear distorted or unusual sound), contact your hearing care professional. A malfunctioning hearing aid can damage your hearing.
- Only use original consumables with your hearing aids (e.g. tubes, wax guards, domes etc.). Consult your hearing aid professional for more information.
- When wearing the hearing aid, make sure to stay alert to sounds around you.
- No modification of this hearing aid is allowed.

Warning related to power hearing aids

- A power hearing aid can produce very loud sound to compensate for severe or profound hearing loss. There is a risk that the loud sound can further impair the user's hearing.

CAUTION:

- Use your hearing aids as your hearing care professional recommends. Incorrect use may damage your hearing.
- Do not use a broken or modified hearing aid. It may not work properly and may be harmful to your hearing. It may also cause scratches or sores due to sharp edges.
- Do not modify the shape of your hearing aid or its accessories. This can cause skin reactions or sharp edges leading to scratches or sores.
- If you suspect that you have a detached wax guard or another object in your ear canal, consult your hearing care professional. These objects can be harmful and can cause an infection in your ear.
- If you have a sore or injury where your hearing aid touches your ear or head, continued use of the hearing aid may cause it to worsen or prevent it from healing. Consult a hearing care professional for assistance.
- Your hearing aids are tuned to your hearing. Do not allow others to use your hearing aids as this can damage their hearing.
- Immediately discontinue using the hearing aid and contact a physician if experiencing discomfort or ringing in the ears. Prolonged use can cause damage to the residual hearing, tinnitus or hyperacusis.

For hearing care professionals

 WARNING:

- The developed sound pressure level in the ears of children can be substantially higher than in average adults. It is recommended to perform an RECD measurement to ensure the correct target for the fitted OSPL90.
- Special care should be exercised in selecting and fitting hearing aids with a maximum sound pressure level (maximum OSPL90) of 132 dB SPL or higher (IEC 60318-5:2006) as there may be a risk of further impairing the remaining hearing of the hearing aid user.

 CAUTION: Do not change the outer casing or any parts of a hearing aid unless appropriately protected against ESD.

Troubleshooting

Issue	Potential cause	Potential solution
Feedback, "whistling"	Is the hearing aid inserted correctly in the ear?	Put it back in. Check for the red marker on the right hearing aid and the blue marker on the left hearing aid.
	Is the volume very loud?	Reduce it.
	Are you holding an object (e.g., a hat or a phone) close to a hearing aid?	Move your hand away to create more space between the hearing aid and the object.
	Is your ear full of wax?	Visit your doctor.
No sound	Is the hearing aid turned on?	Turn it on.
	Is there a battery in the hearing aid?	Insert a new battery.
	Is the battery still good?	Replace it with a new one.
	Is your ear full of wax?	Visit your doctor.

Issue	Potential cause	Potential solution
Sound is distorted or weak?	Did your hearing aid get damp?	Use a desiccant (drying kit).
	Is the battery dirty?	Clean it or replace it with a new one.
	The battery is dead	Replace it with a new one.
Battery drains very quickly	Did you leave your hearing aid turned on for long periods of time?	Always switch off your hearing aids when you are not using them, e.g. during the night.
	Is the battery old?	Check the date on the battery pack.
Still having an unresolved issue?		Consult your hearing care professional.

Regulatory information

Warranties and repairs

The manufacturer provides a warranty on hearing aids in the event of defects in workmanship or materials, as described in applicable warranty documentation. In its service policy, the manufacturer pledges to secure functionality at least equivalent to the original hearing aid. As a signatory to the United Nations Global Compact initiative, the manufacturer is committed to doing this in line with environment-friendly best practices. Hearing aids therefore, at the manufacturer's discretion, may be replaced by new products or products manufactured from new or serviceable used parts, or repaired using new or refurbished replacement parts. The warranty period of hearing aids is designated on your warranty card, which is provided by your hearing care professional.

For hearing aids that require service, please contact your hearing care professional for assistance.

Hearing aids that malfunction must be repaired by a qualified technician. Do not attempt to open the case of hearing aids, as this will invalidate the warranty.

Ambient conditions

Temperature test

The hearing aids undergo various tests in temperature and damp heating cycling according to internal and industry standards within the specified values:

From	*To*
-25 °C	70 °C
-13 °F	158 °F

During use

	From	*To*
During normal operation, the temperature should be within the specified values:	5 °C 41 °F	40 °C 104 °F
– At a relative humidity range of 15% to 90%, non-condensing, but not requiring a water vapor partial pressure greater than 50 hPa.		
– An appropriate atmospheric pressure within	700 hPa	1060 hPa
⚠ CAUTION: During use, your hearing aids may reach:	43 °C 109 °F	

During transport or storage

	From	*To*
During transport or storage, the temperature should be within the specified values:	-25 °C -13 °F	5 °C 41 °F
• At a relative humidity of 90%, non-condensing.	5 °C 41 °F	35 °C 95 °F
• Not requiring a water vapor partial pressure greater than 50 hPa.	35 °C 95 °F	70 °C 158 °F

Warm-up: 15 minutes

Cool-down: 20 minutes

Expected service lifetime

The expected service lifetime for the product when used as intended is:

Product	Lifetime
Hearing aid	5 years

Non-clinical testing (US only)

The devices covered within this user guide have undergone tests for the relevant non-clinical performance testing and biological endpoints in accordance with standards identified below:

- Electrical safety testing is performed according to IEC 60601-1:2005+ AMD1:2012+AMD2:2020, IEC 60601-2-66:2019, IEC 60601-1-11 Edition 2.0 2015-1, IEC 62133-2 Edition 1.0 2017- 02 and IEC 62368-1:2018/COR1:2020.
- Electromagnetic compatibility (EMC) testing is performed according to IEC 62479:2010, ANSI IEEE C63.19-2019 and IEC 60601-1-2:2014+A1:2020.
- Radio and Telecommunication testing is performed to be in compliance with applicable parts of the FCC rules in title 47 of the CFR.
- Electroacoustic testing is performed according to ANSI/ASA S3.22-2014 and ANSI/CTA 2051:2017.
- Usability Engineering was performed in compliance with IEC 62366-1:2015.

The devices covered in this user guide passed all tests for the relevant non-clinical performance testing and biological endpoints, namely cytotoxicity (ISO 10993−05:2009), sensitization, and intracutaneous reactivity (ISO 10993−10:2010).

Similarly, usability testing and software verification and validation demonstrated mitigation of risks to an acceptable level as well as reasonable assurance of safe and effective device performance.

Clinical data (US only)

The devices have been evaluated clinically through equivalence, and the devices have been compared to equivalent devices and similar devices on the market with similar intended purpose, e.g., to compensate for hearing impairment by amplifying and transmitting sound to the ear.

Based on technical and clinical data presented for the device in question, the equivalent predecessor and generally similar devices, it is concluded to support the clinical performance expressed in user needs and claims.

The clinical data leaves no questions open regarding clinical performance and is for this reason deemed sufficient.

Statement

This device complies with part 15 of the FCC rules and ISED rules. Its operation is subject to the following two conditions:

1. This device may not cause harmful interference.
2. This device must accept any interference received, including interference that may cause undesired operation.

NOTE: This equipment has been tested and found to comply with the limits for a Class B digital device, pursuant to part 15 of the FCC rules. These limits are designed to provide reasonable protection against harmful interference in a residential installation. This equipment generates, uses, and can radiate radio frequency energy and, if not installed and used following the instructions, may cause harmful interference to radio communications.

However, there is no guarantee that interference will not occur in a particular installation. If this equipment does cause harmful interference to radio or television reception, which can be determined by turning the equipment off and on, the user is encouraged to try to correct the interference by one or more of the following measures:

- Redirect or relocate the receiving antenna

- Increase the separation between the equipment and receiver
- Connect the equipment to an outlet or a circuit that is different from the one to which the receiver is connected
- Consult the dealer or an experienced radio/TV technician for help.

Changes or modifications can void the user's authority to operate the equipment.

CAN ICES-003(B) / NMB-003(B).

The products are in compliance with the following regulatory requirements:

- In the US: FCC CFR 47 Part 15, subpart B.
- In Canada: these hearing aids are certified under the rules of ISED.
- For other international regulatory requirements, please refer to the regulatory requirements of the specific country.

Type designations

The hearing aid type designation for the models included in this user guide is:

CAI10.

Hearing aid variants

Availability of models may vary by country.

Completely-In-the-canal (CIC) hearing aid type **CAI10**, using a zinc**-**air battery, is available in the following variants:

SA4CIC-LP, SA3CIC-LP, SA2CIC-LP.
SA4CIC-MP, SA3CIC-MP, SA2CIC-MP.
SA4CIC-HP, SA3CIC-HP, SA2CIC-HP.

Technical specifications

Hearing aid model	Maximum output
All Low Power (LP) models (CIC models)	113 dB SPL (typical)
All Medium Power (MP) models	115 dB SPL (typical)
All High Power (HP) models	120 dB SPL (typical)

	LP	MP	HP
Current Drain (Quiescent/Operating)	0.53/0.73 mA	0.55/0.84 mA	0.53/0.76 mA

Data in accordance with IEC60118-0 Edition 4.0 2022, IEC60118-7 and ANSI S3.22-2009, supply Voltage 1.3V

For further technical data in accordance with IEC60118-0 Edition 4.0 2022, IEC60118-7:2005 and ANSI S3.22-2014, please see the data sheet for your hearing aids.

All Low Power (LP) models (US only)

Additional technical data

Latency, mid frequency delay (2 kHz)	5.1	ms
Attack/release time (2 kHz syllabic)	12 / 70	ms

Input/Output response, measured in a 2cc coupler at the reference test gain @ 2 KHz

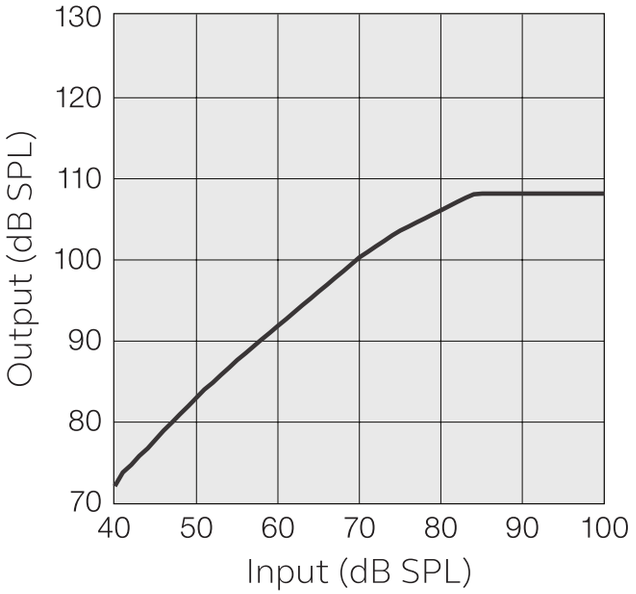

Medium Power (MP) models (US only)

Additional technical data

Latency, mid frequency delay (2 kHz)	5.1	ms
Attack/release time (2 kHz syllabic)	12 / 70	ms

Input/Output response, measured in a 2cc coupler at the reference test gain @ 2 KHz

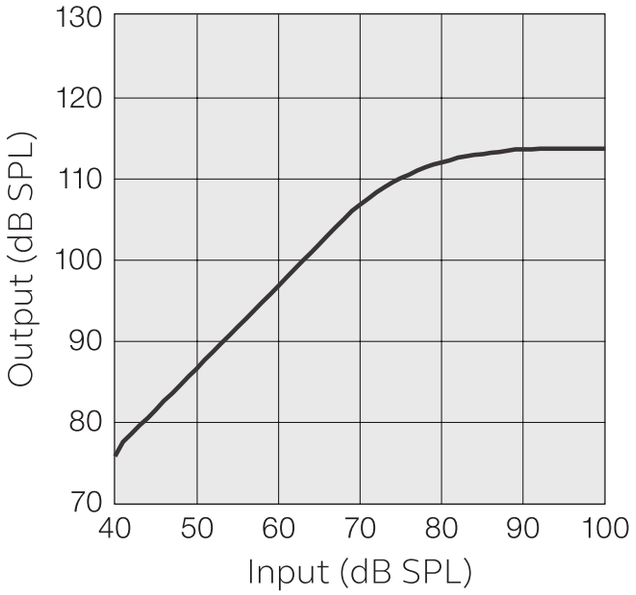

High Power (HP) models (US only)

Additional technical data

Latency, mid frequency delay (2 kHz)	5.1	ms
Attack/release time (2 kHz syllabic)	12 / 70	ms

Input/Output response, measured in a 2cc coupler at the reference test gain @ 2 KHz

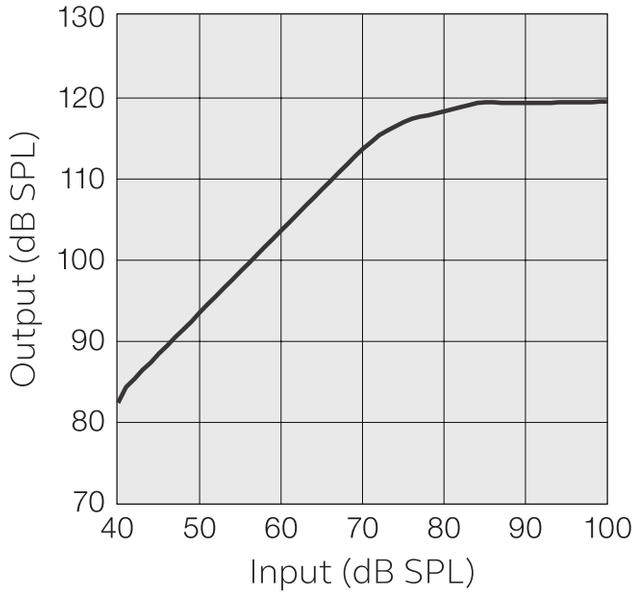

Additional information

Copyright

© 2026 GN Hearing A/S. All rights reserved. ReSound is a trademark of GN Hearing A/S.

Manufacturer according to FDA:

GN ReSound North America
5005 Dean Lakes Blvd
Shakopee, MN 55379
USA
1-888-735-4327
resound.com

Manufacturer according to Health Canada:

ReSound Canada
2 East Beaver Creek Road, Building 3
Richmond Hill, ON L4B 2N3
Canada
1-888-737-6863
resound.com

ReSound Government Services
5005 Dean Lakes Blvd.
Shakopee, MN 55379
USA
1-800-392-9932
resound.com/veterans

403065102US_CA_VA- 26.02 - Rev. B (Date of issuance: 2026.02.01)